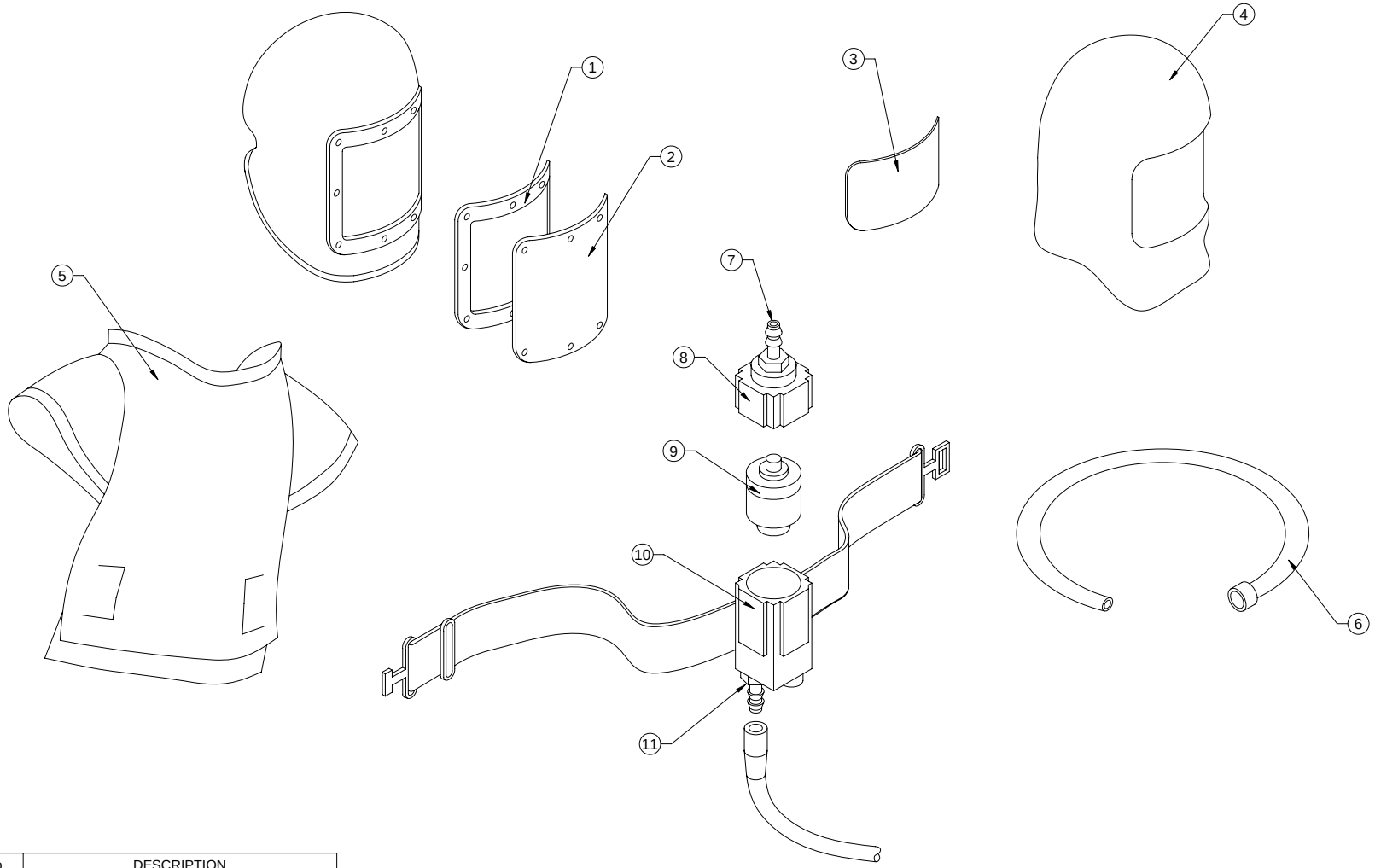

ITEM	PART No.	DESCRIPTION
N/A	PC 20 B	BLAST HELMET COMPLETE
N/A	PC 21 P	BREATHING AIR FILTER WITH WAIST BAND ASSY
1	PC 20 B/1S	S B WINDOW SEAL
2	PC 20 B/1	MOULDED PERSPEX FIXED WINDOW ASSY
3	PC 26 E	DISPOSABLE WINDOW SCREEN
4	PC 20 B/2	EXTERNAL RUBBER ENVELOPE
5	PC 20 B/4	CAPE NECK BAND
6	—	BREATHING AIR HOSE
7	—	1/4" BSP TAIL
8	—	REGULATOR ASSEMBLY
9	PC 21 AP	BELT PACK REPLACEMENT ELEMENT
10	—	WAIST BELT & HOUSING
11	—	1/4" BSP TAIL

Rev	Alterations	Date	By
B	Redrawn with new filter pack	31/01/07	RP

CUSTOMER

ALL DIMENSIONS IN MM UNLESS OTHERWISE STATED

OPEN DIMENSION TOLERANCES

UP TO 30	± 0.2
31 TO 150	± 0.5
151 TO 500	± 1.0
501 TO 1000	± 2.0
OVER 1000	± 2.0 PER 1000
ANGLES	± 1°

DRAWN: R.P.

DATE: 18/01/07

SCALE: 1:10

TITLE

CAVALIER BLAST HELMET & BREATHING AIR PACK REPLACEMENT PARTS LIST

POWER BLAST INTERNATIONAL LTD.

DRAWING No. 13-20001

ISSUE No. B